A-SAFE

# iFlex Single Traffic Barrier+

PRH-1006-A-SAFE-15022024-2

# Production

## Dimensions (mm/inches)

- A 230 / 9
- B 230 / 9
- C 22 / ⅞
- D 600-2200 (200 increments)
  23⅝ - 86⅝ (7⅞ increments)
- E 190 / 7½
- F 100 / 4
- G 190 / 7½
- H 300 /12
- I 775 / 30½
- J 1050 / 41⅜
- K 1135 / 44 ¾
- L 205 / 8

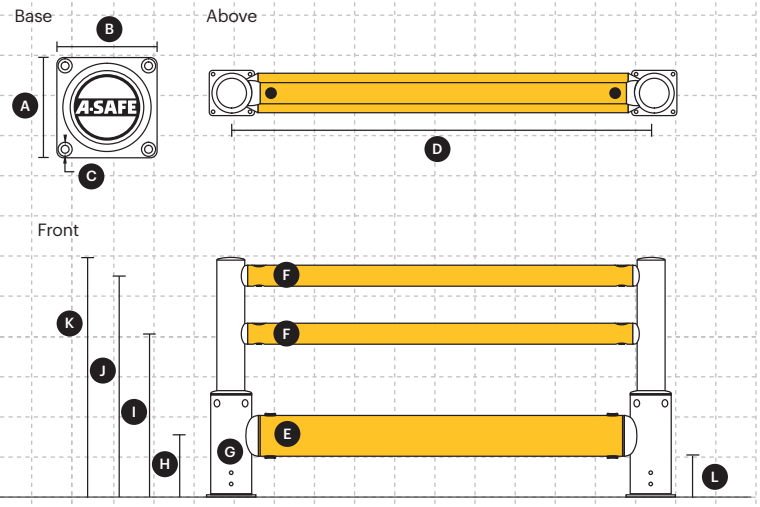


## Product Material

### Post and rails

**MEMAPLEX™**

Ultimate strength polymer created from an exclusive composition of the most sophisticated polyolefins and rubber additives, expertly blended for unequalled strength and flexibility.

Revolutionary 3-Layered Material
- Inner strengthening core
- Central impact absorption zone
- Outer UV stabilised colour layer

### Standard base

Zinc nickel, electrophoretic coating

### Fixings

Steel

## Weight of product

| Posts | |
|---|---|
| End Post | 16.44 Kg / 36.24 lbs |
| Mid Post | 18.74 Kg / 41.31 lbs |

**Rails**

| Typical Rail Length | Rail Diameter (mm/inches) | |
|---|---|---|
| | 100 / 4 | 190 / 7½ |
| 1000 / 39⅜ | 1.64 Kg / 3.62 lbs | 4.33 Kg / 9.55 lbs |
| 1600 / 63 | 2.83 Kg / 6.24 lbs | 7.85 Kg / 17.31 lbs |
| 2000 / 78¾ | 3.62 Kg / 7.98 lbs | 10.18 Kg / 22.44 lbs |

## Colour Combinations

### Standard

**Post**
Standard Black
RAL 9005*
PANTONE Black

**Rail**
Standard Yellow
RAL 1007*
PANTONE 7548*

### Non Standard Options

**Post**
Standard Yellow
RAL 1007*
PANTONE 7548*

**Rail**
Black
RAL 9005*
PANTONE Black

**Rail**
Grey
MB32 Slate Grey*
PANTONE 425*

*Please note that the RAL and PANTONE colours listed are the closest match to standard A-SAFE colours, but may not be exact matches of the actual product colour and should be used for guidance only.

## Minimum order quantities

Not applicable on this product

# Suitability

### Environment

Internal and External use

### ATEX Suitability

Not suitable in an explosive atmosphere

### Standard Base and Fixing

Zinc nickel, electrophoretic coating

**15mm Hex Head** Through Bolt, Z/P

### Vehicle Suitability

| Lightweight Counterbalance FLT | Electric Reach Truck | Electric Pedestrian Truck | Manual Pallet Truck | Electric Pedestrian Stacker |
|---|---|---|---|---|

### Fit for purpose application

| Traffic and pedestrian segregation | Building and equipment protection | Corridor and wall protection |
|---|---|---|

**Impact Zone**
205 - 395mm
(8 - 15½ inches)

| Material Properties | MEMAPLEX™ |
|---|---|
| Temperature Range | -10°C to 50°C |
| Ignition Temperature | 370°C to 390°C |
| Flash Point | 350°C to 370°C |
| Toxicity | Not Hazardous |
| Chemical Resistance | Excellent - ISO/TR 10358 |
| Weathering Stability (Grey Scale) | 5/5* |
| Light Stability (Blue Wool Scale) | 7/8** |
| Static Rating (Surface Resistivity) | $10^{15}$ - $10^{16}$ Ω |
| Hygiene Seals | Yes |

* Weathering scale 1 is very poor and 5 is excellent ** Light stability scale 1 is very poor and 8 is excellent

### Fire information

Manufactured from polypropylene. Polypropylene has an ignition temperature of 370º Celsius which is significantly higher than materials such as wooden pallets or polymers such as flexible PVC. This means that for combustion of an A-SAFE barrier to occur, a facility fire would need to be both large and well advanced, by which time any personnel would have already been evacuated to safety.

Polymer has been engineered to remain stable up to a temperature of 350º Celsius. In contrast, PVC starts breaking down at between 249º Celsius and 273º Celsius, and materials such as wood will burn instantly.

Our material has been specially developed to minimise the release of smoke during combustion. Furthermore, unlike environmentally hazardous polymers like PVC, it does not release harmful dioxins, hydrogen cyanide or hydrogen chloride when burnt.

### Environmental information

Research conducted by a leading plastic solutions company* showed that producing one metric tonne of polymer generates less carbon emissions than producing a tonne of steel**. Therefore, from the very outset of raw material production, polymer provides a significant $CO_2$ saving over steel.

For more information visit A-SAFE.com

* http://www.borealisgroup.com ** www.liloontheweb.org.uk/handbook/carbonfootprint

| Recycling Information | | | |
|---|---|---|---|
| Packaging | Post and Rails | Fixings | Bases |
| Mixed Recycled | 5 | Steel | Steel |

# *Fixings

| Fixing Type | Item No. | Description | Nom. Drill Hole (W) | Min. Drill Depth | Wrench Size | Torque Setting | Qty per Pack | Per Post |
|---|---|---|---|---|---|---|---|---|
| Standard | B-02-01-0037 | 15mm Hex Head Through Bolt, Z/P | 15mm / ⅝" | 95mm / 3¾" | 17mm / 11/16"AF | 45Nm / 34ft/lb | 4 | 1 |
| Countersunk | B-02-01-0040 | 15mm CSK SKT Head Through Bolt, Z/P | 15mm / ⅝" | 95mm / 3¾" | 6mm / ¼"AF | 40Nm / 30ft/lb | 4 | 1 |
| **Chemical/Resin | B-02-01-0044 | Chemical Anchor Stud 12 x160mm z/p | 14mm / 9/16" | 100mm / 4" | 19mm / ¾"AF | 40Nm / 30ft/lb | 1 | 4 |
| ***Removable | B-02-01-0042 | Internal-threaded anchor socket M12, Z/P | 20mm / 25/32" | 125mm / 5" | - | 40Nm / 30ft/lb | 1 | 4 |
| | B-02-02-0005 | M12x35mm Hex Head set screw z/p | | | 19mm / ¾"AF | | 1 | 4 |
| | B-02-02-0013 | M12 Form C Washer z/p | | | | | 1 | 4 |

| | | |
|---|---|---|
| Resin Tube | B-02-01-0046 | Chemical Resin 380ml tube |

** 1no Tube of resin required per 12no fixing bolts *** 1no Tube of resin required for 10no fixings bolts

## Ground Works

Before you install A-SAFE barrier we advise a site survey of the ground intended for the product. This information is crucial as the ground conditions can vastly affect the performance of the safety barrier.

We should always request to see the Operations and Maintenance Manual (OMM) for the building we are installing barrier. This document will give key information such as -

- Depth of concrete slab installed
- Areas where rebar is being used
- Areas where services are located in the building
- Operating temperatures of the facility

If an OMM is not available, we should request to produce an on-site pull-out test. The pull-out test gives us all the information we need to evaluate if an install is possible.

For more information please refer to the Ground Works document in the Product Hub on the A-SAFE SharePoint.

## Concrete Pad

190mm OD Post
15mm Fixing Bolts
230 x 230mm
Base Plate

- A Concrete Pad
- B Hardcore
- C Damp Proof Membrane

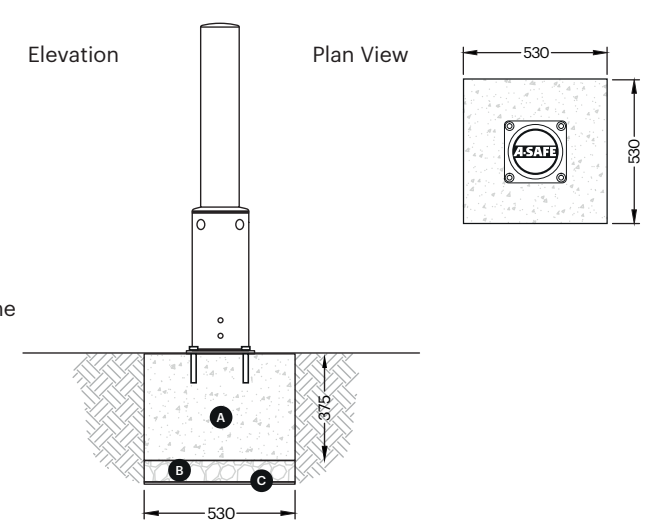


Dimensions of the concrete pad shown are a minimum size only.

***IMPORTANT.** The fixings data detailed above are based on A-SAFE supplied fixings. If a customer uses their own fixings, they must refer to specific install instructions.

# Part Codes

1. M-01-01-0001 = 130 Cap, Black and Yellow
2. E-03-01-0002 = 25 x 25 x 3mm Wall x670mm
3. P-01-02-0025 = S. T. Plus Post, Black - End
4. M-01-01-0010 = Pin Plug, Yellow x 4 No
5. M-01-01-0053 = 190 Lock Pin, Black and Yellow (Top) x 4 No
6. S-01-02-0012 = 190 Plus Cap, Black and Yellow
7. S-01-01-0001 = S. T. Post, Black – End
8. B-02-01-0037 = 15mm Fixings, R-SPL-II-10100/20L (4PK)
9. M-01-01-0004 = 190 Coupling Cover, Black and Yellow
10. S-01-02-0042 = 190 Coupling and Sleeve (TPE)
11. B-04-01-0012 Post Pin 36OD x 395mm (11 mm Wall)
12. M-01-01-0005 = 130 Coupling Cover, Black and Yellow x 2 No
13. M-01-01-0007 = 130 Coupling, Black x 2 No
14. M-01-01-0010 = Pin Plug, Black x 4 No
15. M-01-01-0009 = 100 Lock Pin, Black and Yellow x 4 No
16. M-01-01-0031 = Lock Pin Cap, Black x 2 No
17. M-01-01-0059 = Long Lock Pin – 190
18. P-01-01-0002 to P-01-01-0018 = Rail 100mm OD, Yellow 600mm to 2200mm x 2 No – 200mm Increments
19. P-01-01-0027 to P-01-01-0043 = Rail 190mm OD, Yellow 600mm to 2200mm – 200mm Increments

Data Sheets

Testing Videos

CAD

Install Documents

Certificates

If you have any questions please contact
the product management team at A-SAFE HQ
Product.Management@asafe.com

A-SAFE
PIONEERING WORKPLACE SAFETY

PRODUCTHUB

| | |
|---|---|
| Document Reference | PRH-1006-A-SAFE-15022024-2 |
| Document Description | iFlex Single Traffic Barrier+ |
| Date Created | November 2023 |
| Author/s | Matthew Briggs |
| Checked by | Jerry Budby |
| Approved by | Ben Allen |
| Revision | Version 2 - February 2024 |